BOXX MODULAR

24’ x 56’ BOXXPlex Office Complex



Square Feet	1,344
Size	24’ x 56’
Model #	OCUFX04W
Delivery Timing	4-8 weeks
Height (Ground Level to Roof)	Single Story
Exterior Finish	Smart Panel
Roofing Material	45 mil EPDM
Interior Wall Finish	VCG
Flooring Material	VCT
Lighting	LED with occupancy sensors
HVAC Quantity	2
HVAC Thermostat	Programmable
Restroom Quantity	2
Office Quantity	4
Electrical	Single Phase
Plumbing	Restrooms, kitchenette with coffee bar, stub out for high/low water cooler and mop sink
Construction type	Built to international code
Furnishings	Rentable furniture packages available
Detailed Layout Description	Office size - 12’ x 12’ Open area - Can be used for cubicles Restroom - Single-user
Suggested Number of People	6+
Estimated Time to Occupancy	4-8 weeks

Drawings are conceptual and variances may occur. Individual finished products may not be exactly as shown.

BOXX MODULAR

24’ x 56’ BOXXPlex Office Complex

BOXXPlex

Right **Space** *for Big* **Jobs**

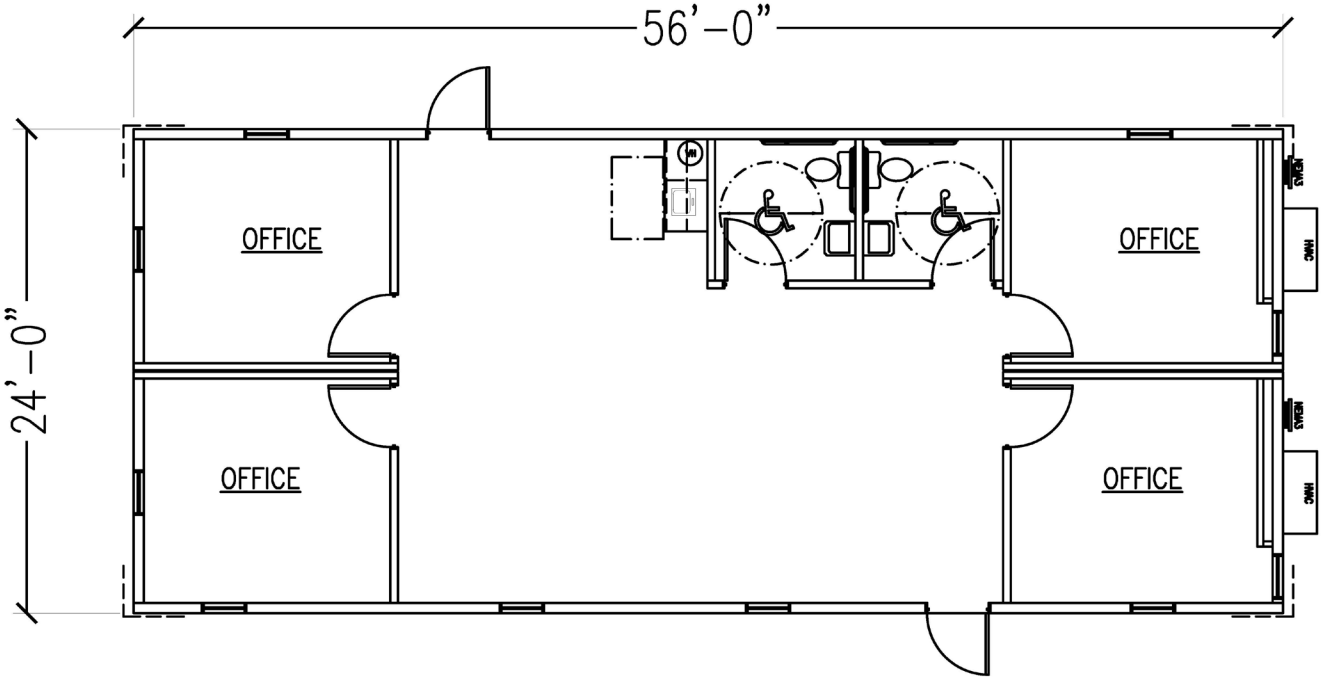

Climate Control
Stay comfortable with programmable thermostats for heating and cooling.

Premium Finishes
Durable high-quality VCG walls and VCT flooring designed for high-traffic job sites.

Diverse Applications
A flexible solution for offices, support facilities, operational hubs, and workforce spaces across a wide range of industries.

Scalable Solution
Scale your space as needs evolve, from a few offices to a fully integrated modular complex.

Drawings are conceptual and variances may occur. Individual finished products may not be exactly as shown.